S K Y 9 0

EX-Q System Chart

13. 2″ sleeve [TKP00113]
32. T-mount
34. 35mm camera
36. TCA-4(1.25″) [TKA00210]
46. Ocular adapter(1.25″) [TKP00101]
47. Ocular(1.25″)
48. Ocular(2″)
49. Diagonal prism(1.25″)
60. Extender-Q.1.6x [TKA00595]

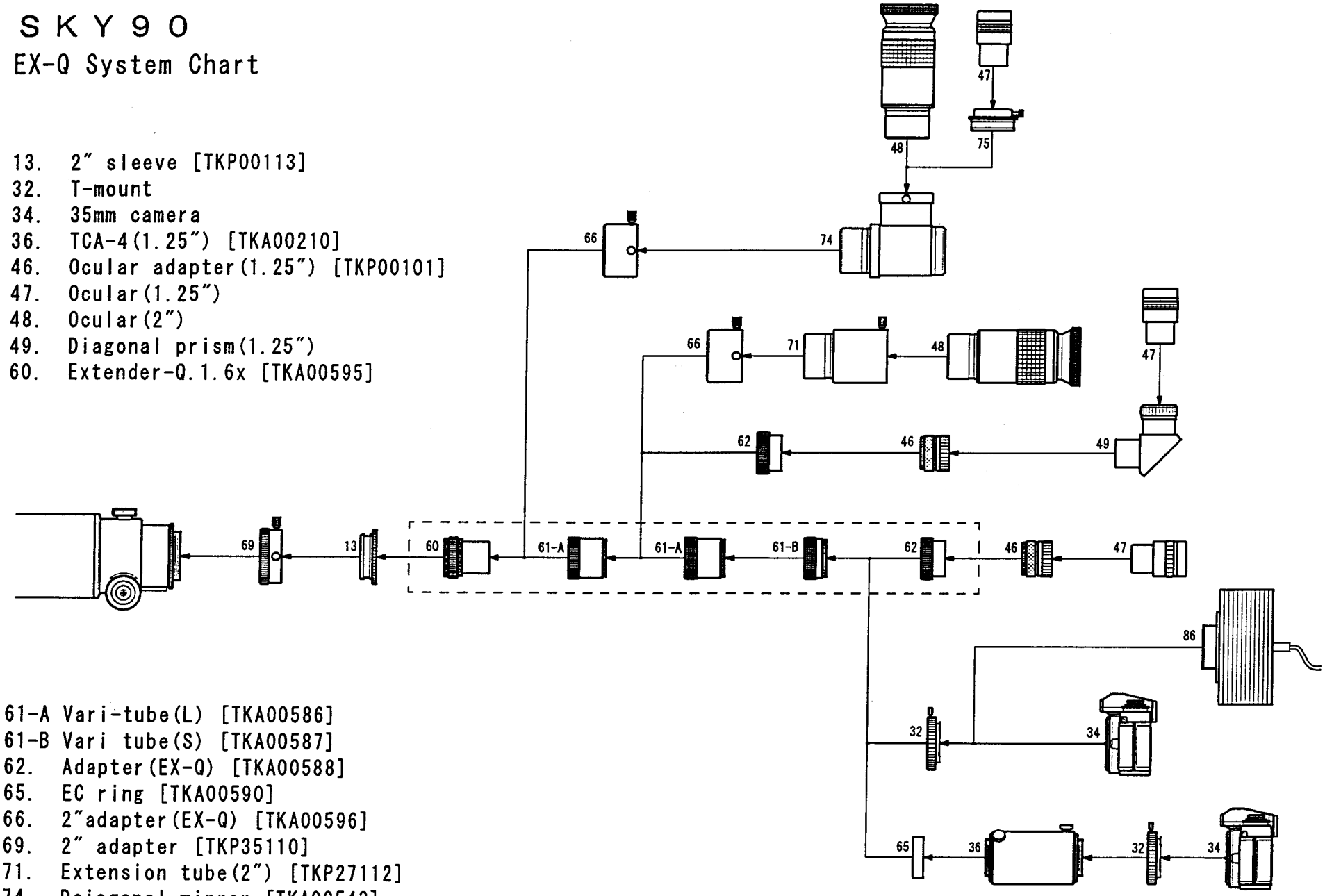

61-A Vari-tube(L) [TKA00586]
61-B Vari tube(S) [TKA00587]
62. Adapter(EX-Q) [TKA00588]
65. EC ring [TKA00590]
66. 2″adapter(EX-Q) [TKA00596]
69. 2″ adapter [TKP35110]
71. Extension tube(2″) [TKP27112]
74. Daiagonal mirror [TKA00543]
75. Adapter(DM) [TKA00111]
86. CCD